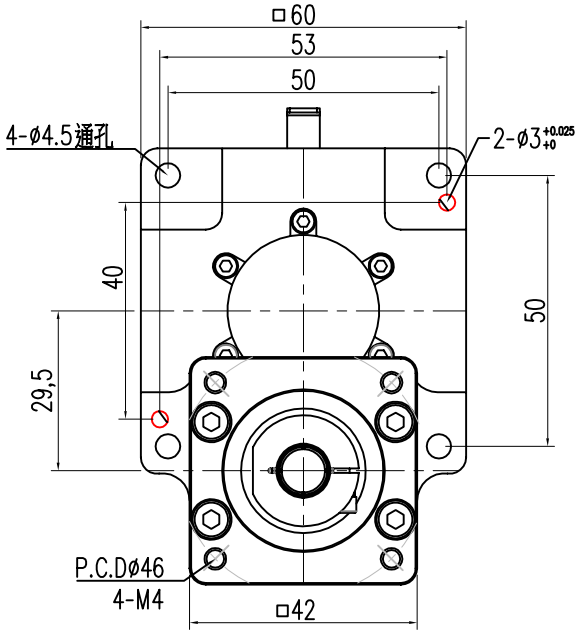

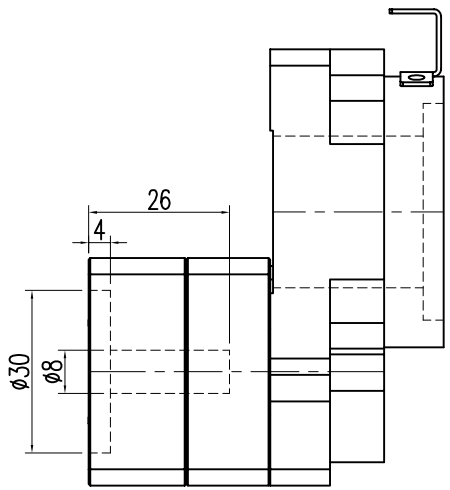

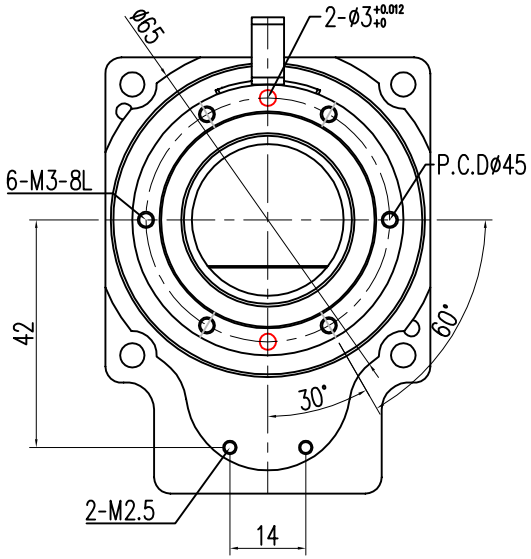

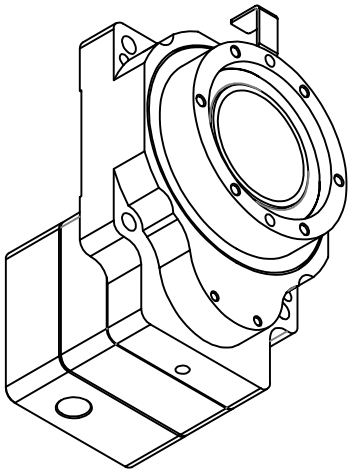

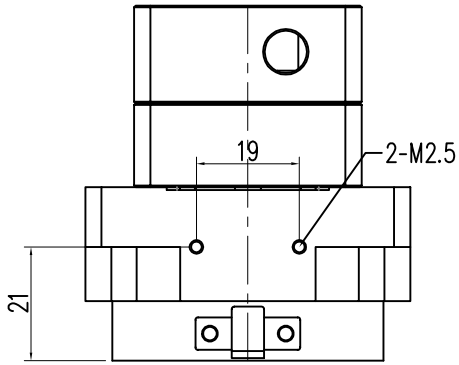

型號/Model	RDV-060-XXX-(08-30-46-M4)	額定扭距/Nominal Output Torque	Nm		
精度/Backlash	≦1(arc-min)	額定轉速/Nominal Input Speed	3000 RPM		
減速比/Ratio	5,10,18	軸向負荷/Max.Axial Load	2000 N		
容量/Capacity	sevro motor shaft ø8 flange 30-46	轉動慣量/Rotational inertia		單位/Unit:	mm

CST嘉晟精密有限公司
JIA CHENG PRECISION MACHINERY CO.,LTD.