90 degree precision reducer

Multiple output shaft type,
gearbox 1:1 to 1:200

Applicable servo motor
capacity: 0.1kw ~ 15kw

Jia Cheng Precision Co.,Ltd.
www.chusheng.com.tw

Patent license

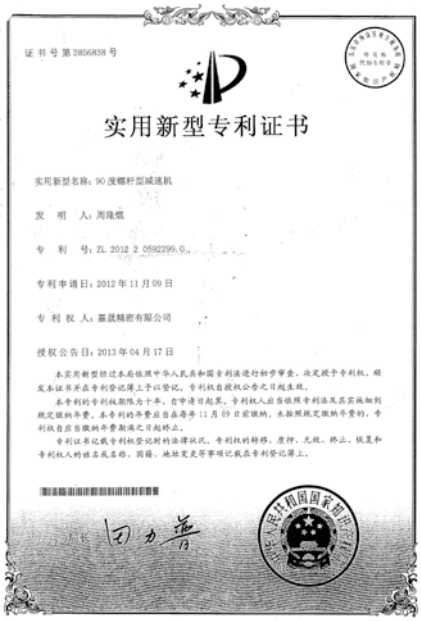

证书号第2856838号

实用新型专利证书

实用新型名称：90度螺杆型减速机

发 明 人：周隆煜

专 利 号：ZL 2012 2 0592299.0

专利申请日：2012年11月09日

专 利 权 人：嘉晟精密有限公司

授权公告日：2013年04月17日

本实用新型经过本局依照中华人民共和国专利法进行初步审查，决定授予专利权，颁发本证书并在专利登记簿上予以登记。专利权自授权公告之日起生效。

本专利的专利权期限为十年，自申请日起算。专利权人应当依照专利法及其实施细则规定缴纳年费。本专利的年费应当在每年11月09日前缴纳，未按照规定缴纳年费的，专利权自应当缴纳年费期满之日起终止。

专利证书记载专利权登记时的法律状况。专利权的转移、质押、无效、终止、恢复和专利权人的姓名或名称、国籍、地址变更等事项记载在专利登记簿上。

国家知识产权局

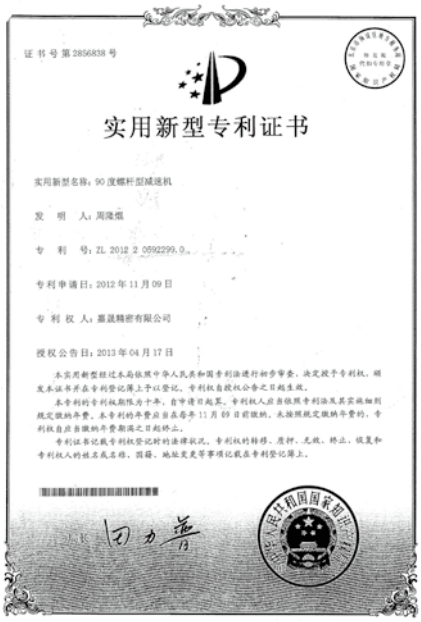

证书号第2856838号

实用新型专利证书

实用新型名称：90度螺杆型减速机

发 明 人：周隆煜

专 利 号：ZL 2012 2 0592299.0

专利申请日：2012年11月09日

专 利 权 人：嘉晟精密有限公司

授权公告日：2013年04月17日

本实用新型经过本局依照中华人民共和国专利法进行初步审查，决定授予专利权，颁发本证书并在专利登记簿上予以登记。专利权自授权公告之日起生效。

本专利的专利权期限为十年，自申请日起算。专利权人应当依照专利法及其实施细则规定缴纳年费。本专利的年费应当在每年11月09日前缴纳，未按照规定缴纳年费的，专利权自应当缴纳年费期满之日起终止。

专利证书记载专利权登记时的法律状况。专利权的转移、质押、无效、终止、恢复和专利权人的姓名或名称、国籍、地址变更等事项记载在专利登记簿上。

国家知识产权局

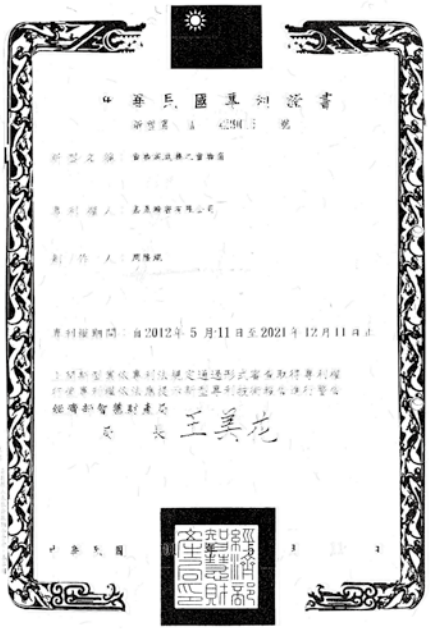

中華民國專利證書

新型第 M 461718 號

新型名稱：

專利權人：

新型創作人：

專利權期間：自2012年 5 月11日至2021年12月11日止

上開新型業依專利法規定通過形式審查取得專利權
行使專利權依法應提示新型專利技術報告進行警告
經濟部智慧財產局
局 長 王美花

中華民國

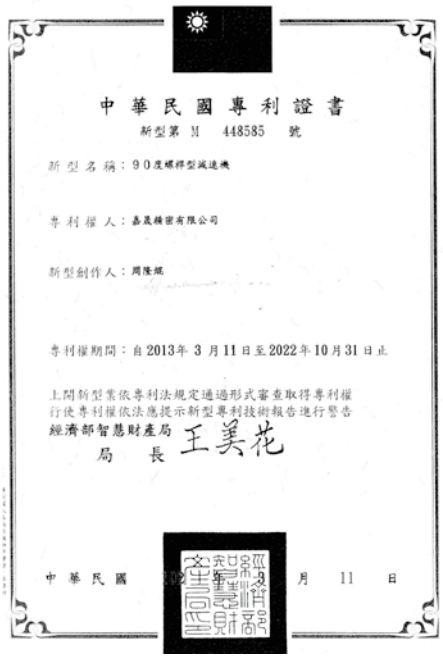

中華民國專利證書

新型第 M 448585 號

新型名稱：90度螺桿型減速機

專利權人：嘉晟精密有限公司

新型創作人：周隆煜

專利權期間：自2013年 3 月11日至2022年10月31日止

上開新型業依專利法規定通過形式審查取得專利權
行使專利權依法應提示新型專利技術報告進行警告
經濟部智慧財產局
局 長 王美花

中華民國 2013 年 3 月 11 日

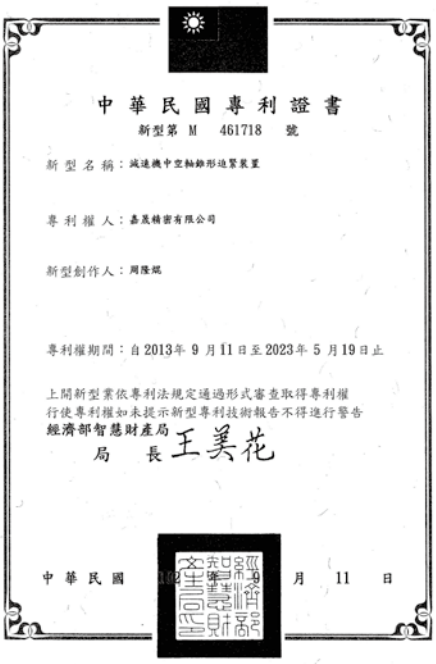

中華民國專利證書

新型第 M 461718 號

新型名稱：減速機中空軸線形迫緊裝置

專利權人：嘉晟精密有限公司

新型創作人：周隆煜

專利權期間：自2013年 9 月11日至2023年 5 月19日止

上開新型業依專利法規定通過形式審查取得專利權
行使專利權如未提示新型專利技術報告不得進行警告
經濟部智慧財產局
局 長 王美花

中華民國 2013 年 9 月 11 日

Directory

Right-Angle type precision gearheads Cross-sectional view and Introduction

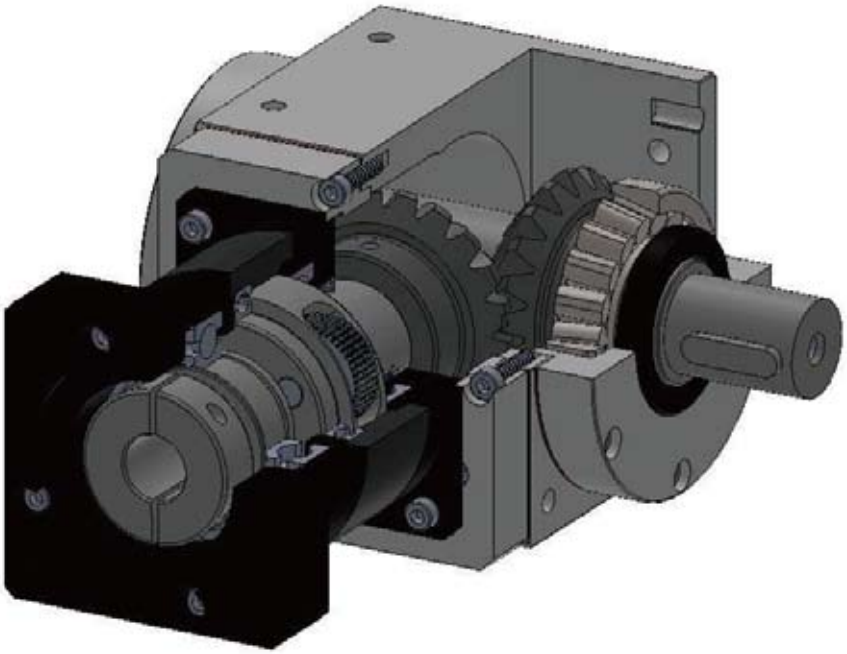

High strength： Precision spiral bevel gears, using nickel-chromium alloy steel SCM415 HRC60 degreesh。

High efficiency： High efficiency planetary structure and the structure of the combination of precision spiral bevel。

High rigidity： The gear box has excellent rigidity structure, using double taper bearing support for the output load changes especially for big occasions。

Diversification： Output shaft species diversification, a single output shaft, double output shaft, hollow shaft, hollow flange, hollow shaft cone packing type, screw linear, linear thread.

Reduction ratio： Single-stage1：3~1：10　Dual stage1：12~1：100

Small, space-saving： Frame 55MM~220MM

Output torque： 15Nm~1600Nm，Spiral bevel gear modulusM1.0~M6.0

Easy to install： 5 plane direction can be installed。

Capacity applicable： 50W~15KW

Patented design： The gear box has applied through a variety of patent。

1.Hollow shaft and cone packing ring : Suitable for heavy load applications。
2.Suitable for : wheel agencies, transportation handling mechanism, cam mechanism tilting mechanism LCD panel, rack and pinion mechanism and any other industry bodies.

1.Hollow shaft rotary flange : Suitable for heavy load applications。
2.Suitable for : rotating mechanism, CNC lathes mechanical arm of the tilting mechanism.

1.Hollow shaft (clamp type), single and dual hollow shaft hollow shaft
2.Suitable for : conveyor transporting mechanism

1.Hollow shaft clamping plus keyway : Suitable for heavy load applications.
2.Suitable for : Roller agencies, transportation handling mechanism, cam mechanism tilting mechanism LCD panel, rack and pinion mechanism.

1.Hollow shaft with keyway : The new supplement stops payment the tooth hole
2.General transport mechanism。

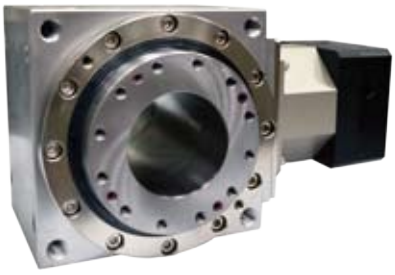

1.Large hollow shaft rotary flange : Suitable for heavy load applications。
2.Suitable for : roller mechanism, flame cutting machine mechanical arm rotary mechanism, cam mechanism, LCD panel flip agencies, rack and pinion mechanism.

RXW Series

Model Establishing:

RXW085A — L1 — 10 — C — S1 — B1 — Y1

Type :
RXW055A
RXW070A
RXW085A
RXW105A
RXW125A(B)
RXW150A(B)
RXW180A(B)
RXW220A
RXW080AS
RXW110AS(BS)
RXW135AS(BS)
RXW165AS(BS)
RXW200AS(BS)
RXW250AS

Stage No:
L1(Single Stage Ratio)
L2(Double Stage Ratio)

Servo motor mark
S1~S11

Nil: on behalf of the Standard
Special notation
Input and output terminal size,
According to customer specified production.

Shaft Option:
C : Single hollow shaft
C+K: Single hollow shaft+keyway
2C : Double hollow shaft
2C+K: Double hollow shaft+keyway
P : Single output shaft
2P : Double output shaht
CR : Hollow shaft keyway
RF : Hollow shaft rotary flange
RF-K : Hollow shaft rotary flange+keyway
RFHP : Hollow shaft +cone packing ring

Backlash Level
Nil: represent standard backlash
L1≦5~10 arc/min L2≦8~15 arc/min
Precision backlash B1
L1≦1!3 arc/min L2≦2~5 arc/min
Precision backlash B2
L1≦2~5 arc/min L2≦3~8 arc/min
* Special type: B0 ultra-precision backlash

Stage No / Specifications	Single Stage Ratio(L1)	Double Stage Ratio(L2)
RXW055A	1,3,4,5,7,10	12,15,16,20,25,28,30,35,40,50
RXW070A	1,3,4,5,6,7,10	12,15,16,20,25,28,30,35,40,50,60,70,100
RXW085A	1,3,4,5,6,7,10	12,15,16,20,25,28,30,35,40,50,60,70,100
RXW105A	1,3,4,5,6,7,10	12,15,16,20,25,28,30,35,40,50,60,70,100
RXW125A(B)	1,3,4,5,6,7,10	12,15,16,20,25,28,30,35,40,50,60,70,100
RXW150A(B)	1,3,4,5,6,7,8,9,10	12,15,16,20,25,28,30,35,40,50,60,70,80,90,100
RXW180A(B)	3,4,5,6,7,10	12,15,16,20,25,28,30,35,40,50,60,70,100
RXW220A	3,4,5,6,7,10	12,15,16,20,25,28,30,35,40,50,60,70,100
RXW080AS	2,6,8,10,12,14,16,20	24,30,32,40,42,50,56,60,70,80,100,120,140,160,200
RXW110AS(BS)	2,6,8,10,12,14,16,20	24,30,32,40,42,50,56,60,70,80,100,120,140,160,200
RXW135AS(BS)	2,6,8,10,12,14,16,20	24,30,32,40,42,50,56,60,70,80,100,120,140,160,200
RXW165AS(BS)	2,6,8,10,12,14,16,20	24,30,32,40,42,50,56,60,70,80,100,120,140,160,200
RXW200AS(BS)	2,6,8,10,12,14,16,20	24,30,32,40,42,50,56,60,70,80,100,120,140,160,200
RXW250AS	2,6,8,10,12,14,16,20	24,30,32,40,42,50,56,60,70,80,100,120,140,160,200

RXW Series-Characteristic Sheet:

	Stage No.	Reducer Ratio (i)	RXW055A	RXW070A	RXW085A	RXW105A	RXW125A	RXW125B	RXW150A	RXW150B	RXW180A	RXW180B	RXW220A
Nominal Output Torque (Nm)	Single Stage L1	1/1	10	30	40	100	230		400				
		1/3	10	30	40	100	230	100	400	230	900	450	900
		1/4	15	30	50	150	330	160	500	330	1100	550	1500
		1/5	15	30	50	150	330	160	500	330	1200	550	1600
		1/6	14	30	42	120	330	160	500	290	1100	530	1500
		1/7	14	30	42	120	250	160	500	290	1100	530	1500
		1/10	10	30	40	100	230	100	400	230	900	450	1100
	Double Stage Ratio L2	1/12	10	30	40	100	230	100	400	230	900	450	900
		1/15	10	30	40	100	230	100	400	230	900	450	900
		1/16	15	30	50	150	250	160	500	330	1200	550	1500
		1/20	15	30	50	150	250	160	500	330	1200	550	1600
		1/25	15	30	50	150	250	160	500	330	1200	550	1600
		1/28	15	30	50	150	250	160	500	330	1100	550	1500
		1/30	10	30	40	100	230	100	450	330	900	450	900
		1/35	15	30	50	150	250	160	500	330	1100	550	1500
		1/40	15	30	50	150	250	160	500	330	1100	550	1500
		1/50	15	30	50	150	250	160	500	330	1100	550	1500
		1/60	15	30	50	150	250	160	500	330	1100	550	1500
		1/70	12	30	50	120	250	160	500	290	1100	550	1500
		1/100	10	30	40	100	230	100	400	230	900	450	1100
Max.Output Torque (Nm)	L1,L2	3~100	3 Times of Nominal Output Torque (Nm)										
Nominal Input Speed (rpm)	L1,L2	3~100	3000	3000	3000	3000	3000	3000	3000	3000	3000	3000	3000
Backlash(arc-min)	L1	3~10	≦10	≦10	≦10	≦10	≦10	≦10	≦10	≦10	≦10	≦10	≦10
	L2	12~100	≦15	≦15	≦15	≦15	≦15	≦15	≦15	≦15	≦15	≦15	≦15
Percision Backlash B2 (arc-min)	L1	3~10	≦5	≦5	≦5	≦5	≦5	≦5	≦5	≦5	≦5	≦5	≦5
	L2	12~100	≦8	≦8	≦8	≦8	≦8	≦8	≦8	≦8	≦8	≦8	≦8
Percision Backlash B1 (arc-min)	L1	3~10		≦3	≦3	≦3	≦3	≦3	≦3	≦3	≦3	≦3	≦3
	L2	12~100		≦5	≦5	≦5	≦5	≦5	≦5	≦5	≦5	≦5	≦5
Max.Radial Load (N)	L1,L2	3~100	1100	3250	3250	5850	9100	9100	14300	14300	19500	19500	28600
Max.Axial Load (N)	L1,L2	3~100	650	3250	3250	5850	9100	9100	14300	14300	19500	19500	28600
Efficiency (%)	L1	3~10	90%										
	L2	12~100	85%										
Weight (kg)	L1	3~10	1.8	2.9	3.8	10.5	15.5	12.5	31	25.5	56.5	37.5	80.0
	L2	12~100	2.1	3.3	4.3	11.2	17	13.2	35.5	28.5	63.5	42.0	90.0
Use Temperature (C)	L1,L2	3~100	-10° C~+80° C										
Lubrication oil	L1,L2	3~100	All formate the lubricating oil (COMPLEX HV2)										
Install the direction	L1,L2	3~100	Wanton direction										
Noise Level (db)	L1,L2	3~100	≦68	≦68	≦68	≦68	≦70	≦70	≦72	≦72	≦74	≦74	≦75

*1:1Maximum input speed ≦1200RPM

Direction of rotation:

When the input shaft to the right rotates the output shaft was left rotation.

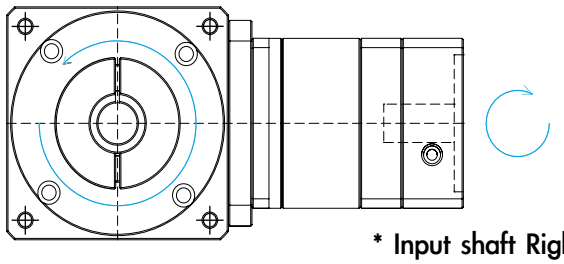

* Output shaft left rotation

* Input shaft Right rotation

RXW-S Series-Characteristic Sheet:

	Stage No.	Reducer Ratio (i)	RXW080AS	RXW110AS	RXW110BS	RXW135AS	RXW135BS	RXW165AS	RXW165BS	RXW200AS	RXW200BS	RXW250AS
Nominal Output Torque (Nm)	Single Stage L1	1/2	70	250		450		800		1800		2500
		1/6	80	200	90	400	280	700	600	1500	1000	2000
		1/8	85	250	100	450	320	800	660	1850	1100	2300
		1/10	85	250	100	450	320	800	660	1850	1100	2300
		1/12	80	225	95	435	320	750	660	1850	1100	2300
		1/14	80	215	95	425	280	750	600	1750	1000	2200
		1/16	80	210	90	415	270	700	600	1700	1000	2100
		1/20	70	200	80	400	240	700	460	1650	900	1900
	Double Stage Ratio L2	1/30	80	200	90	400	280	700	600	1500	1000	2000
		1/32	85	250	100	450	320	800	660	1850	1100	2300
		1/40	85	250	100	450	320	800	660	1850	1100	2300
		1/50	85	250	100	450	320	800	660	1850	1100	2300
		1/56	85	250	100	450	320	800	660	1850	1100	2300
		1/60	80	200	95	400	280	700	600	1500	1000	2000
		1/70	85	250	100	450	320	800	660	1850	1100	2200
		1/80	85	250	100	450	320	800	660	1850	1100	2300
		1/100	85	250	100	450	320	800	660	1850	1100	2300
		1/120	80	225	95	435	290	750	630	1750	1050	2200
		1/140	80	215	95	425	280	750	630	1750	1000	2100
		1/160	80	210	90	415	270	700	600	1700	950	2000
		1/200	70	200	80	400	240	700	460	1700	900	1900
Max.Output Torque (Nm)	L1,L2	3~100	2.5 Times of Nominal Output Torque (Nm)									
Nominal Input Speed (rpm)	L1,L2	3~100	3000	3000	3000	3000	3000	3000	3000	3000	3000	3000
Backlash(arc-min)	L1	3~10	≦5	≦5	≦5	≦5	≦5	≦5	≦5	≦5	≦5	≦5
	L2	12~100	≦8	≦8	≦8	≦8	≦8	≦8	≦8	≦8	≦8	≦8
Percision Backlash B2 (arc-min)	L1	3~10	≦3	≦3	≦3	≦3	≦3	≦3	≦3	≦3	≦3	≦3
	L2	12~100	≦4	≦4	≦4	≦4	≦4	≦4	≦4	≦4	≦4	≦4
Percision Backlash B1 (arc-min)	L1	3~10	≦2	≦2	≦2	≦2	≦2	≦2	≦2	≦2	≦2	≦2
	L2	12~100	≦3	≦3	≦3	≦3	≦3	≦3	≦3	≦3	≦3	≦3
Max.Radial Load (N)	L1,L2	3~100	3900	5500	5500	9800	9800	16500	16500	24100	24100	32600
Max.Axial Load (N)	L1,L2	3~100	3900	5500	5500	9800	9800	16500	16500	24100	24100	32600
Efficiency (%)	L1	3~10	90%									
	L2	12~100	85%									
Weight (kg)	L1	3~10	3.1	7.8	4.3	20.8	15.5	35.5	28.5	55	40.5	80
	L2	12~100	4.1	9.2	6.3	24.3	18.2	40.5	31.2	65.5	48.5	95
Use Temperature (C)	L1,L2	3~100	-10° C~+80° C									
Lubrication oil	L1,L2	3~100	All formate the lubricating oil (COMPLEX HV2)									
Install the direction	L1,L2	3~100	Wanton direction									
Noise Level (db)	L1,L2	3~100	≦65	≦68	≦68	≦68	≦68	≦70	≦70	≦72	≦72	≦72

* Order product (customized): This series according to customer demand.

* Order products: Precision backlash B0
(L1 ≦ 1 arc-min, L2 ≦ 2 arc-min)

Direction of rotation:

When the input shaft to the right rotates the output shaft was left rotation.

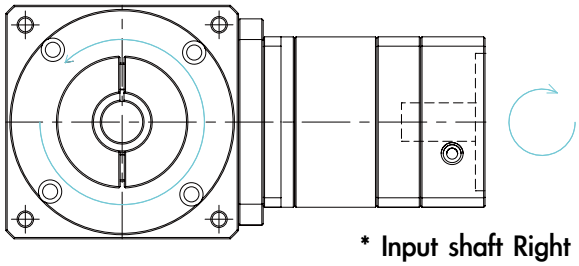

* Input shaft Right rotation

* Output shaft left rotation

Reducer -Select and warranty

In accordance with use occasions and impact load and time Daily operation conditions

Load state	Safety factor（Sf）		Usage examples
	3~10H/Daily operation	12H以上/Daily operation	
Average load	1.0	1.25	Transportation machinery、Working machinery (feed axis)、Printing Machinery、Press out machinery、Rubber Machinery、Paper Machinery、Food Machinery、Metal processing machinery、Sugar hole mechanical、Electronic semiconductor machinery、Any industrial machinery and equipment
Light impact load	1.25	1.5	
Large impact load	1.5	2.0	

* The output terminal 2 side gear box fitted with "tapered roller bearings" especially for radial, axial load, inertia, cam mechanism, eccentric operating agency.

Simple calculation example：

EX: 400W servo motor capacity selection 1:30 reducer, the choice of which a model?

P (Nm)=(kW*974/3000)*9.8,kw Servo capacity 974= Constant

3000 = Servo motor rated speed 1kg-m=9.8Nm

Rated motor torque calculation (0.4*974/3000)*9.8=1.27Nm

1.27*30*0.85=32.3Nm(Safety factor can be selected according to the following three models)

*Sf = 1.0 **Select** RXW070A-L2-30(Not suitable for loads of big occasions)
Sf = 1.25 **Select** RXW085A-L2-30
Sf = 1.5 **Select** RXW105A-L2-30
Sf = 2.0 **Select** RXW105A-L2-30

Product Guarantee and Points for Attention

1. Content of Guarantee:

a) Normal use, the warranty period of 15 months from the date of delivery
b) Human factors, natural irresistible force is not covered under warranty
c) The breakdown caused by the refit or repair and maintenance not done by our company, warranty does not cover
d) The above warranty is limited to the company's products, does not contain other machine or device

2. Restriction of Responsibility:

Regarding all special damage, indirect damage, and negative damage (the loss of interests one deserves to get originally, or expects to get) arising from our products, our company takes no responsibility.

Hollow shaft+Packing cone type

Dimensions：

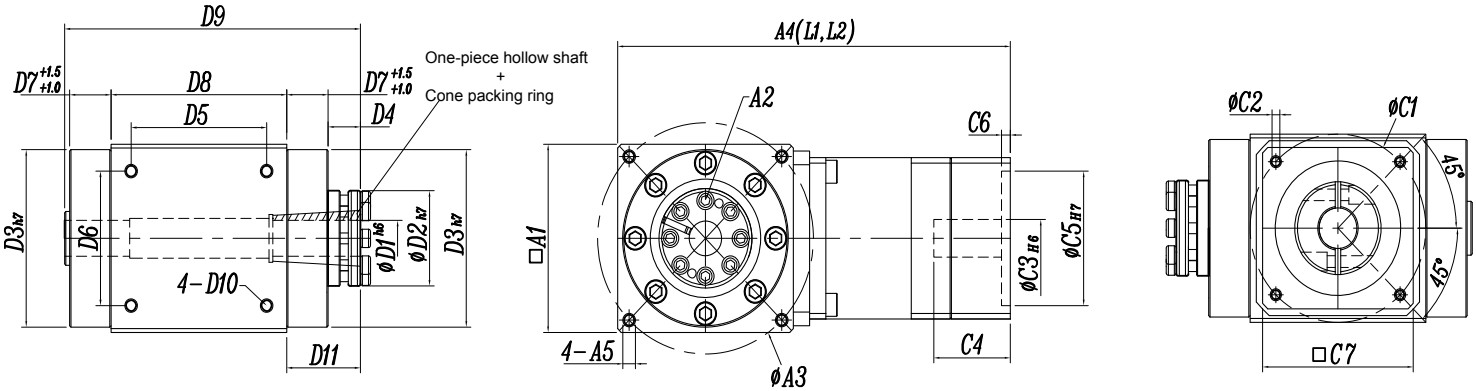

Specification	RXW070A	RXW085A	RXW105A	RXW125A	RXW125B	RXW150A	RXW150B	RXW180A	RXW180B
A1	70	85	105	125	125	150	150	180	180
A2	8-M5	8-M5	8-M5	8-M6	8-M6	12-M6	12-M6	12-M8	12-M8
A3	86	100	118	145	145	185	185	200	200
A4 (L1 Single-stage)	156.5	173	223	281	247.5	368	312	403	368
A4 (L2 Dual-stage)	177.5	194	250	308.5	274.5	414	340	455	414
A5	M5-12L	M6-12L	M8-15L	M8-15L	M8-15L	M10-18L	M10-18L	M12-18L	M12-18L
D1	13	15	20/25	30	30	35/40	35/40	45/50	45/50
D2	35	44	59	71	71	79	79	90	90
D3	66	82	100	120	120	135	135	165	165
D4	20	26	27	26	26	35	35	38.5	38.5
D5	54	68	80	100	100	120	120	141.4	141.4
D6	50	52	60	80	80	100	100	141.4	141.4
D7	*11.5 / 16.5	*10 / 15.5	18.5	19.5	19.5	20	20	21	21
D8	70	85	105	125	125	150	150	180	180
D9	125	144	171	192	192	227	227	262.5	262.5
D10	M5-12L	M6-12L	M8-15L	M8-15L	M8-15L	M10-18L	M10-18L	M12-18L	M12-18L
D11	36.5	41.5	45.5	45.5	45.5	55	55	59.5	59.5
C1	≦90	≦90	≦145	≦200	≦145	≦215	≦200	≦215	≦215
C2	≦M6	≦M6	≦M8	≦M12	≦M8	≦M12	≦M12	≦M12	≦M12
C3	≦19	≦19	≦24	≦35	≦24	≦42	≦35	≦42	≦42
C4	≦41	≦41	≦62	≦80	≦62	≦116	≦80	≦116	≦116
C5	≦70	≦70	≦110	≦114.3	≦110	≦180	≦114.3	≦180	≦180
C6	≦5	≦5	≦7	≦7	≦7	≦7	≦7	≦7	≦7
C7	≦80	≦80	≦120	≦176	≦120	≦196	≦176	≦220	≦176

＊Input shaft and the flange detailed dimensions C1～C7, such as the pages of p19

＊This token is a special type

Hollow shaft rotary flange type Dimensions:

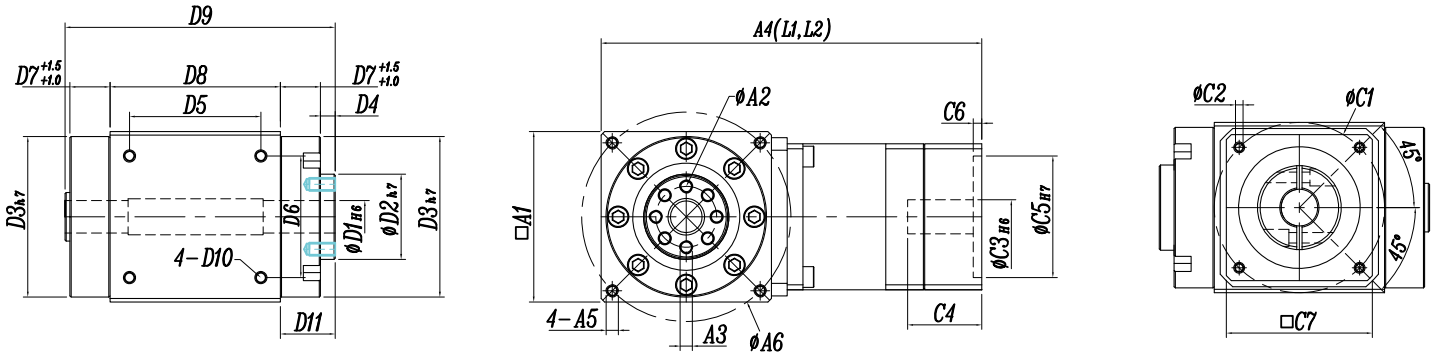

Specification	RXW070A	RXW085A	RXW105A	RXW125A	RXW125B	RXW150A	RXW150B	RXW180A	RXW180B
A1	70	85	105	125	125	150	150	180	180
A2	26	35	50	60	60	68	68	76	76
A3	8-M5-10L	8-M5-12L	8-M5-15L	8-M6-15L	8-M6-15L	12-M6-15L	12-M6-15L	12-M8-15L	12-M8-15L
A4 (L1 Single-stage)	156.5	173	223	281	247.5	368	312	403	368
A4 (L2 Dual-stage)	177.5	194	250	308.5	274.5	414	340	455	414
A5	M5-12L	M6-12L	M8-15L	M8-15L	M8-15L	M10-18L	M10-18L	M12-18L	M12-18L
A6	86	100	118	145	145	185	185	200	200
D1	13	15	25	30	30	35	35	50	50
D2	35	44	59	71	71	79	79	90	90
D3	66	82	100	120	120	135	135	165	165
D4	10	6	9	6	6	6	6	6	6
D5	54	68	80	100	100	120	120	141.4	141.4
D6	50	52	60	80	80	100	100	141.4	141.4
D7	*11.5 / 16.5	*10 / 15.5	18.5	19.5	19.5	20	20	21	21
D8	70	85	105	125	125	150	150	180	180
D9	115	124	153	172	172	198	198	230	230
D10	M5-12L	M6-12L	M8-15L	M8-15L	M8-15L	M10-18L	M10-18L	M12-18L	M12-18L
D11	26.5	21.5	27.5	25.5	25.5	26	26	27	27
C1	≦90	≦90	≦145	≦200	≦145	≦215	≦200	≦215	≦215
C2	≦M6	≦M6	≦M8	≦M12	≦M8	≦M12	≦M12	≦M12	≦M12
C3	≦19	≦19	≦24	≦35	≦24	≦42	≦35	≦42	≦42
C4	≦41	≦41	≦62	≦80	≦62	≦116	≦80	≦116	≦116
C5	≦70	≦70	≦110	≦114.3	≦110	≦180	≦114.3	≦180	≦180
C6	≦5	≦5	≦7	≦7	≦7	≦7	≦7	≦7	≦7
C7	≦80	≦80	≦120	≦176	≦120	≦196	≦176	≦220	≦176

⁎ Input shaft and the flange detailed dimensions C1～C7, such as the pages of p19

⁎ This token is a special type

Single hollow shaft type

Dimensions:

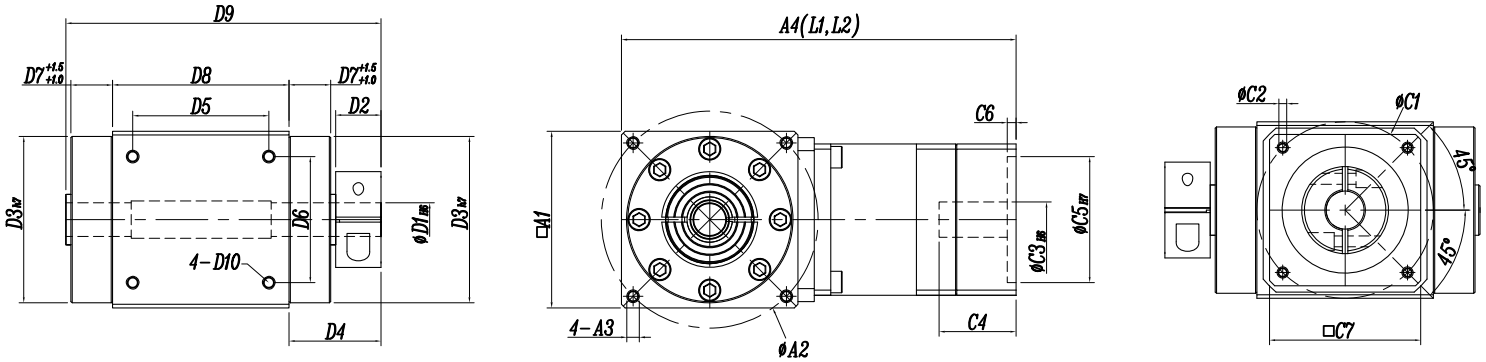

Specification	RXW070A	RXW085A	RXW105A	RXW125A	RXW125B	RXW150A	RXW150B	RXW180A	RXW180B
A1	70	85	105	125	125	150	150	180	180
A2	86	100	118	145	145	185	185	200	200
A3	M5-12L	M6-12L	M8-15L	M8-15L	M8-15L	M10-18L	M10-18L	M12-18L	M12-18L
A4 (L1 Single-stage)	156.5	173	223	281	247.5	368	312	403	368
A4 (L2 Dual-stage)	177.5	194	250	308.5	274.5	414	340	455	414
D1	13	15	25	30	30	40	40	50	50
D2	18	24	25	24	24	33	33	36.5	36.5
D3	66	82	100	120	120	135	135	165	165
D4	36.5	41.5	45.5	45.5	45.5	55	55	59.5	59.5
D5	54	68	80	100	100	120	120	141.4	141.4
D6	50	52	60	80	80	100	100	141.4	141.4
D7	*11.5/16.5	*10/15.5	18.5	19.5	19.5	20	20	21	21
D8	70	85	105	125	125	150	150	180	180
D9	125	144	171	192	192	227	227	262.5	262.5
D10	M5-12L	M6-12L	M8-15L	M8-15L	M8-15L	M10-18L	M10-18L	M12-18L	M12-18L
C1	≦90	≦90	≦145	≦200	≦145	≦215	≦200	≦215	≦215
C2	≦M6	≦M6	≦M8	≦M12	≦M8	≦M12	≦M12	≦M12	≦M12
C3	≦19	≦19	≦24	≦35	≦24	≦42	≦35	≦42	≦42
C4	≦41	≦41	≦62	≦80	≦62	≦116	≦80	≦116	≦116
C5	≦70	≦70	≦110	≦114.3	≦110	≦180	≦114.3	≦180	≦180
C6	≦5	≦5	≦7	≦7	≦7	≦7	≦7	≦7	≦7
C7	≦80	≦80	≦120	≦176	≦120	≦196	≦176	≦220	≦176

* Input shaft and the flange detailed dimensions C1～C7, such as the pages of p19

* This token is a special type

Single hollow shaft + key type

Dimensions:

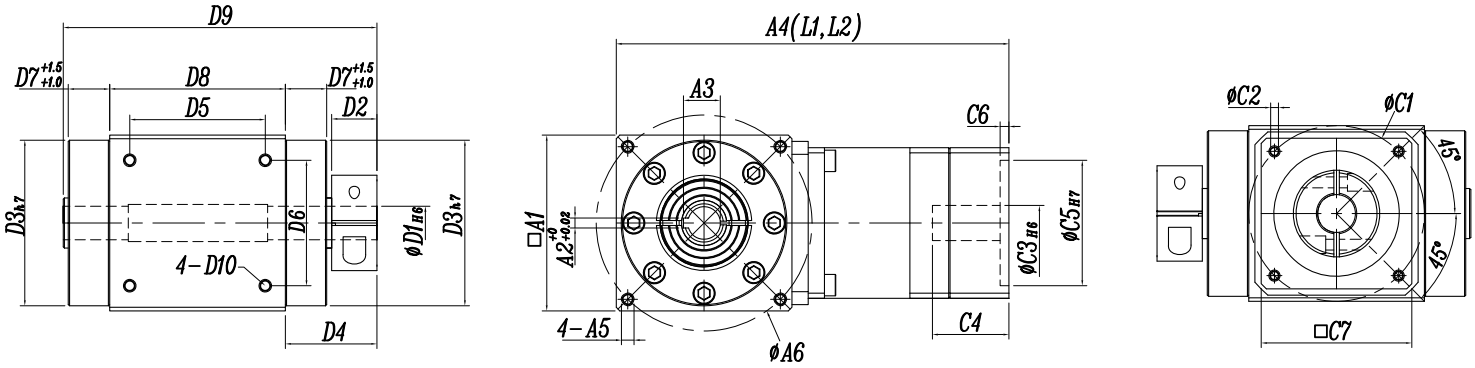

Specification	RXW070A	RXW085A	RXW105A	RXW125A	RXW125B	RXW150A	RXW150B	RXW180A	RXW180B
A1	70	85	105	125	125	150	150	180	180
A2	4	5	6	8	8	10	10	14	14
A3	14.7	17.3	24.7	31.3	31.3	38.3	38.3	53.8	53.8
A4 (L1 Single-stage)	156.5	173	223	281	247.5	368	312	403	368
A4 (L2 Dual-stage)	177.5	194	250	308.5	274.5	414	340	455	414
A5	M5-12L	M6-12L	M8-15L	M8-15L	M8-15L	M10-18L	M10-18L	M12-18L	M12-18L
A6	86	100	118	145	145	185	185	200	200
D1	13	15	22	28	28	35	35	50	50
D2	18	24	25	24	24	33	33	36.5	36.5
D3	66	82	100	120	120	135	135	165	165
D4	36.5	41.5	45.5	45.5	45.5	55	55	59.5	59.5
D5	54	68	80	100	100	120	120	141.4	141.4
D6	50	52	60	80	80	100	100	141.4	141.4
D7	*11.5/16.5	*10/15.5	18.5	19.5	19.5	20	20	21	21
D8	70	85	105	125	125	150	150	180	180
D9	125	144	171	192	192	227	227	262.5	262.5
D10	M5-12L	M6-12L	M8-15L	M8-15L	M8-15L	M10-18L	M10-18L	M12-18L	M12-18L
C1	≦90	≦90	≦145	≦200	≦145	≦215	≦200	≦215	≦215
C2	≦M6	≦M6	≦M8	≦M12	≦M8	≦M12	≦M12	≦M12	≦M12
C3	≦19	≦19	≦24	≦35	≦24	≦42	≦35	≦42	≦42
C4	≦41	≦41	≦62	≦80	≦62	≦116	≦80	≦116	≦116
C5	≦70	≦70	≦110	≦114.3	≦110	≦180	≦114.3	≦180	≦180
C6	≦5	≦5	≦7	≦7	≦7	≦7	≦7	≦7	≦7
C7	≦80	≦80	≦120	≦176	≦120	≦196	≦176	≦220	≦176

⁎ Input shaft and the flange detailed dimensions C1～C7, such as the pages of p19

⁎ This token is a special type

Double hollow shaft type

Dimensions:

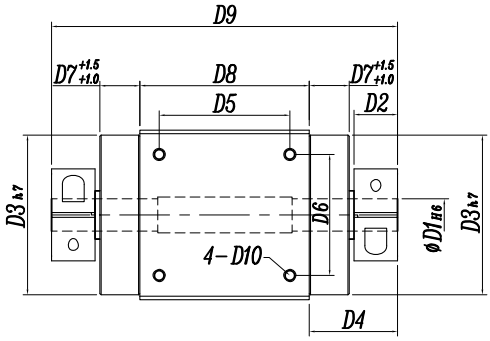

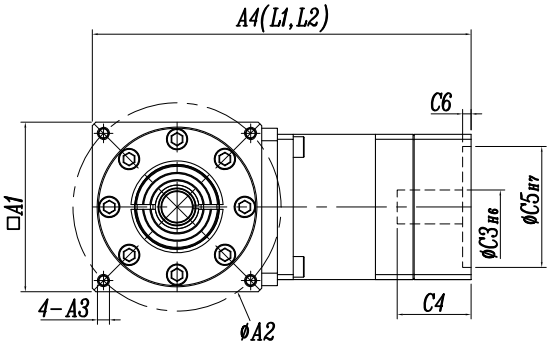

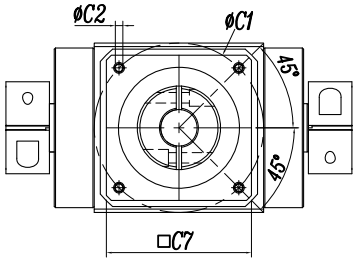

Specification	RXW070A	RXW085A	RXW105A	RXW125A	RXW125B	RXW150A	RXW150B	RXW180A	RXW180B
A1	70	85	105	125	125	150	150	180	180
A2	86	100	118	145	145	185	185	200	200
A3	M5-12L	M6-12L	M8-15L	M8-15L	M8-15L	M10-18L	M10-18L	M12-18L	M12-18L
A4 (L1 Single-stage)	156.5	173	223	281	247.5	368	312	403	368
A4 (L2 Dual-stage)	177.5	194	250	308.5	274.5	414	340	455	414
D1	13	15	25	30	30	40	40	50	50
D2	18	24	25	24	24	33	33	36.5	36.5
D3	66	82	100	120	120	135	135	165	165
D4	36.5	41.5	45.5	45.5	45.5	55	55	59.5	59.5
D5	54	68	80	100	100	120	120	141.4	141.4
D6	50	52	60	80	80	100	100	141.4	141.4
D7	*11.5/16.5	*10/15.5	18.5	19.5	19.5	20	20	21	21
D8	70	85	105	125	125	150	150	180	180
D9	143	168	196	216	216	260	260	299	299
D10	M5-12L	M6-12L	M8-15L	M8-15L	M8-15L	M10-18L	M10-18L	M12-18L	M12-18L
C1	≦90	≦90	≦145	≦200	≦145	≦215	≦200	≦215	≦215
C2	≦M6	≦M6	≦M8	≦M12	≦M8	≦M12	≦M12	≦M12	≦M12
C3	≦19	≦19	≦24	≦35	≦24	≦42	≦35	≦42	≦42
C4	≦41	≦41	≦62	≦80	≦62	≦116	≦80	≦116	≦116
C5	≦70	≦70	≦110	≦114.3	≦110	≦180	≦114.3	≦180	≦180
C6	≦5	≦5	≦7	≦7	≦7	≦7	≦7	≦7	≦7
C7	≦80	≦80	≦120	≦176	≦120	≦196	≦176	≦220	≦176

※ Input shaft and the flange detailed dimensions C1～C7, such as the pages of p19

※ This token is a special type

Double hollow shaft + key type

Dimensions:

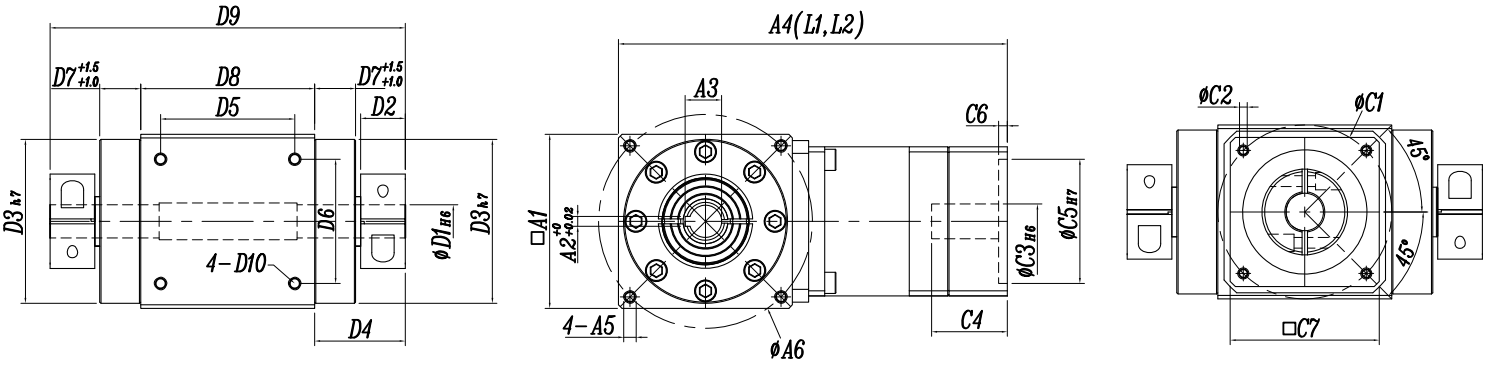

Specification	RXW070A	RXW085A	RXW105A	RXW125A	RXW125B	RXW150A	RXW150B	RXW180A	RXW180B
A1	70	85	105	125	125	150	150	180	180
A2	4	5	6	8	8	10	10	14	14
A3	14.7	16.3	24.7	31.3	31.3	38.3	38.3	53.8	53.8
A4 (L1 Single-stage)	156.5	173	223	281	247.5	368	312	403	368
A4 (L2 Dual-stage)	177.5	194	250	308.5	274.5	414	340	455	414
A5	M5-12L	M6-12L	M8-15L	M8-15L	M8-15L	M10-18L	M10-18L	M12-18L	M12-18L
A6	86	100	118	145	145	185	185	200	200
D1	13	15	22	28	28	35	35	50	50
D2	18	24	25	24	24	33	33	36.5	36.5
D3	66	82	100	120	120	135	135	165	165
D4	36.5	41.5	45.5	45.5	45.5	55	55	59.5	59.5
D5	54	68	80	100	100	120	120	141.4	141.4
D6	50	52	60	80	80	100	100	141.4	141.4
D7	*11.5/16.5	*10/15.5	18.5	19.5	19.5	20	20	21	21
D8	70	85	105	125	125	150	150	180	180
D9	143	168	196	216	216	260	260	299	299
D10	M5-12L	M6-12L	M8-15L	M8-15L	M8-15L	M10-18L	M10-18L	M12-18L	M12-18L
C1	≦90	≦90	≦145	≦200	≦145	≦215	≦200	≦215	≦215
C2	≦M6	≦M6	≦M8	≦M12	≦M8	≦M12	≦M12	≦M12	≦M12
C3	≦19	≦19	≦24	≦35	≦24	≦42	≦35	≦42	≦42
C4	≦41	≦41	≦62	≦80	≦62	≦116	≦80	≦116	≦116
C5	≦70	≦70	≦110	≦114.3	≦110	≦180	≦114.3	≦180	≦180
C6	≦5	≦5	≦7	≦7	≦7	≦7	≦7	≦7	≦7
C7	≦80	≦80	≦120	≦176	≦120	≦196	≦176	≦220	≦176

⁎ Input shaft and the flange detailed dimensions C1～C7, such as the pages of p19

⁎ This token is a special type

Hollow shaft with key type

Dimensions:

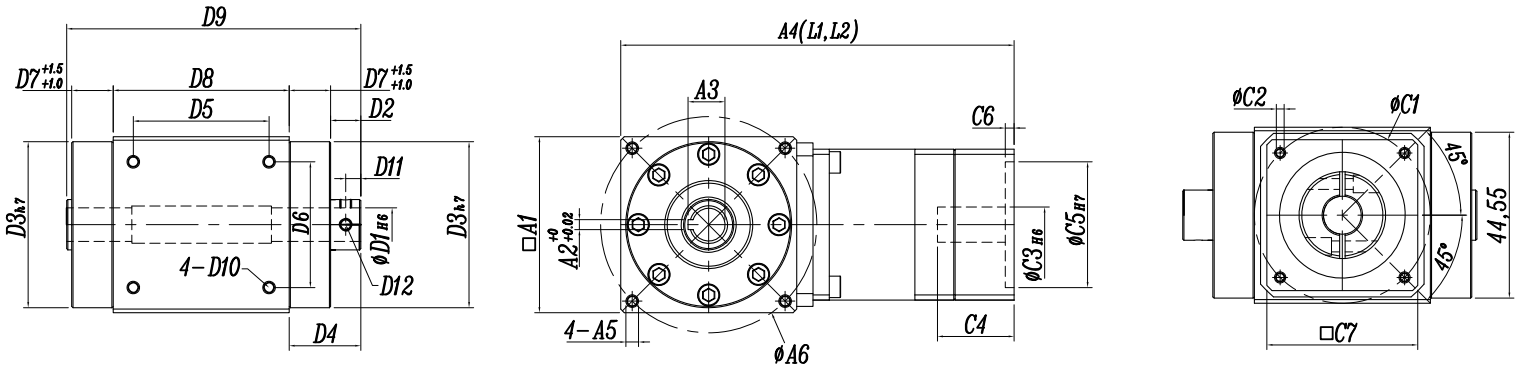

Specification	RXW070A	RXW085A	RXW105A	RXW125A	RXW125B	RXW150A	RXW150B	RXW180A	RXW180B	RXW220A
A1	70	85	105	125	125	150	150	180	180	220
A2	4	5	6	8	8	10	10	14	14	18
A3	14.7	17.3	24.7	31.3	31.3	38.3	38.3	53.8	53.8	69.5
A4 (L1 Single-stage)	156.5	173	223	281	247.5	368	312	403	368	481
A4 (L2 Dual-stage)	177.5	194	250	308.5	274.5	414	340	455	414	532
A5	M5-12L	M6-12L	M8-15L	M8-15L	M8-15L	M10-18L	M10-18L	M12-18L	M12-18L	M16-25L
A6	86	100	118	145	145	185	185	200	200	265
D1	13	14	22	28	28	35	35	50	50	65
D2	10	10	10	12	12	14	14	18	18	22
D3	66	82	100	120	120	135	135	165	165	200
D4	26.5	25.5	28.5	31.5	31.5	34	34	39	39	49
D5	54	68	80	100	100	120	120	141.4	141.4	152
D6	50	52	60	80	80	100	100	141.4	141.4	187
D7	*11.5/16.5	*10/15.5	18.5	19.5	19.5	20	20	21	21	27
D8	70	85	105	125	125	150	150	180	180	220
D9	125	144	171	192	192	227	227	262.5	262.5	298
D10	M5-12L	M6-12L	M8-15L	M8-15L	M8-15L	M10-18L	M10-18L	M12-18L	M12-18L	M16-25L
D11	5	5	5	6	6	7	7	9	9	11
D12	2-M4	2-M4	2-M5	2-M6	2-M6	2-M8	2-M8	2-M12	2-M12	2-M14
C1	≦90	≦90	≦145	≦200	≦145	≦215	≦200	≦215	≦215	≦235
C2	≦M6	≦M6	≦M8	≦M12	≦M8	≦M12	≦M12	≦M12	≦M12	≦M12
C3	≦19	≦19	≦24	≦35	≦24	≦42	≦35	≦42	≦42	≦48
C4	≦41	≦41	≦62	≦80	≦62	≦116	≦80	≦116	≦116	≦116
C5	≦70	≦70	≦110	≦114.3	≦110	≦180	≦114.3	≦180	≦180	≦180
C6	≦5	≦5	≦7	≦7	≦7	≦7	≦7	≦7	≦7	≦7
C7	≦80	≦80	≦120	≦176	≦120	≦196	≦176	≦220	≦176	≦220

⁎Input shaft and the flange detailed dimensions C1～C7, such as the pages of p19

⁎This token is a special type

Single Output Shaft Type Dimensions:

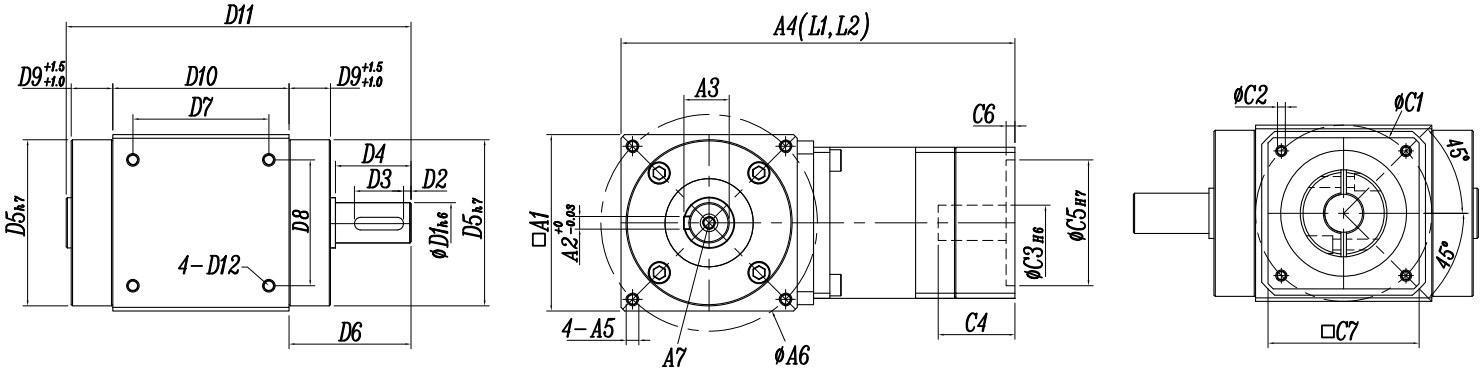

Specification	RXW055A	RXW070A	RXW085A	RXW105A	RXW125A	RXW125B	RXW150A	RXW150B	RXW180A	RXW180B	RXW220A
A1	55	70	85	105	125	125	150	150	180	180	220
A2	4	5	6	8	10	10	12	12	14	14	20
A3	14.5	18	22.5	31	35	35	43	43	53.5	53.5	79
A4 (L1 Single -stage)	127.5	156.5	173	223	281	247.5	368	312	403	368	481
A4 (L2 Dual -stage)	153	177.5	194	250	308.5	274.5	414	340	455	414	532
A5	M5-10L	M5-12L	M6-12L	M8-15L	M8-15L	M8-15L	M10-18L	M10-18L	M12-18L	M12-18L	M16-25L
A6	65	86	100	118	145	145	185	185	200	200	265
A7	M4	M5	M6	M8	M8	M8	M12	M12	M12	M12	M16
D1	13	16	20	28	32	32	40	40	50	50	75
D2	3	3	3.5	3	3	3	3	3	3	3	5
D3	20	20	25	30	40	40	50	50	60	60	80
D4	26	30	35	40	50	50	63	63	73	73	98
D5	53.5	66	82	100	120	120	135	135	165	165	200
D6	40.25	48.5	52.5	60.5	71.5	71.5	85	85	96	96	100
D7	45	54	68	80	100	100	120	120	141.4	141.4	152
D8	34	50	52	60	80	80	100	100	141.4	141.4	187
D9	*9.75/12.75	*11.5/16.5	*10/15.5	18.5	19.5	19.5	20	20	21	21	27
D10	55	70	85	105	125	125	150	150	180	180	220
D11	109.5	137	155	186	218	218	257	257	299	299	376
D12	M5-10L	M5-12L	M6-12L	M8-15L	M8-15L	M8-15L	M10-18L	M10-18L	M12-18L	M12-18L	M16-25L
C1	≦70	≦90	≦90	≦145	≦200	≦145	≦215	≦200	≦215	≦215	≦235
C2	≦M4	≦M6	≦M6	≦M8	≦M12	≦M8	≦M12	≦M12	≦M12	≦M12	≦M12
C3	≦11	≦19	≦19	≦24	≦35	≦24	≦42	≦35	≦42	≦42	≦48
C4	≦30	≦41	≦41	≦62	≦80	≦62	≦116	≦80	≦116	≦116	≦116
C5	≦50	≦70	≦70	≦110	≦114.3	≦110	≦180	≦114.3	≦180	≦180	≦180
C6	≦3.5	≦5	≦5	≦7	≦7	≦7	≦7	≦7	≦7	≦7	≦7
C7	≦60	≦80	≦80	≦120	≦176	≦120	≦196	≦176	≦220	≦176	≦220

⁎Input shaft and the flange detailed dimensions C1～C7, such as the pages of p19

⁎This token is a special type

Dual Output Shaft Dimensions:

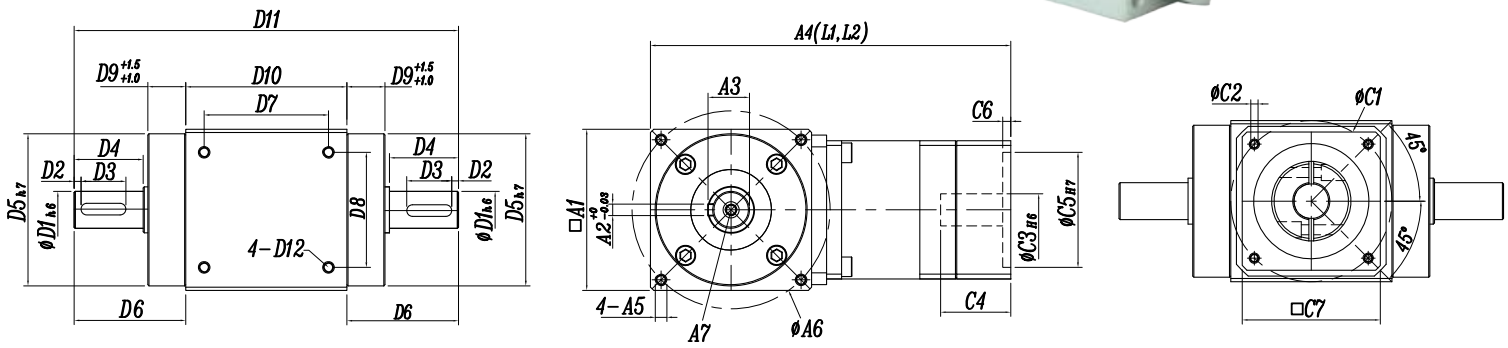

Specification	RXW055A	RXW070A	RXW085A	RXW105A	RXW125A	RXW125B	RXW150A	RXW150B	RXW180A	RXW180B	RXW220A
A1	55	70	85	105	125	125	150	150	180	180	220
A2	4	5	6	8	10	10	12	12	14	14	20
A3	14.5	18	22.5	31	35	35	43	43	53.5	53.5	79
A4 (L1 Single -stage)	127.5	156.5	173	223	281	247.5	368	312	403	368	481
A4 (L2 Dual -stage)	153	177.5	194	250	308.5	274.5	414	340	455	414	532
A5	M5-10L	M5-12L	M6-12L	M8-15L	M8-15L	M8-15L	M10-18L	M10-18L	M12-18L	M12-18L	M16-25L
A6	65	86	100	118	145	145	185	185	200	200	265
A7	M4	M5	M6	M8	M8	M8	M12	M12	M12	M12	M16
D1	13	16	20	28	32	32	40	40	50	50	75
D2	3	3	3.5	3	3	3	3	3	3	3	5
D3	20	20	25	30	40	40	50	50	60	60	80
D4	26	30	35	40	50	50	63	63	73	73	98
D5	53.5	66	82	100	120	120	135	135	165	165	200
D6	40.25	48.5	52.5	60.5	71.5	71.5	85	85	96	96	100
D7	45	54	68	80	100	100	120	120	141.4	141.4	152
D8	34	50	52	60	80	80	100	100	141.4	141.4	187
D9	*9.75/12.75	*11.5/16.5	*10/15.5	18.5	19.5	19.5	20	20	21	21	27
D10	55	70	85	105	125	125	150	150	180	180	220
D11	135.5	167	190	226	268	268	320	320	372	372	474
D12	M5-10L	M5-12L	M6-12L	M8-15L	M8-15L	M8-15L	M10-18L	M10-18L	M12-18L	M12-18L	M16-25L
C1	≦70	≦90	≦90	≦145	≦200	≦145	≦215	≦200	≦215	≦215	≦235
C2	≦M4	≦M6	≦M6	≦M8	≦M12	≦M8	≦M12	≦M12	≦M12	≦M12	≦M12
C3	≦11	≦19	≦19	≦24	≦35	≦24	≦42	≦35	≦42	≦42	≦48
C4	≦30	≦41	≦41	≦62	≦80	≦62	≦116	≦80	≦116	≦116	≦116
C5	≦50	≦70	≦70	≦110	≦114.3	≦110	≦180	≦114.3	≦180	≦180	≦180
C6	≦3.5	≦5	≦5	≦7	≦7	≦7	≦7	≦7	≦7	≦7	≦7
C7	≦60	≦80	≦80	≦120	≦176	≦120	≦196	≦176	≦220	≦176	≦220

＊Input shaft and the flange detailed dimensions C1～C7, such as the pages of p19

＊This token is a special type

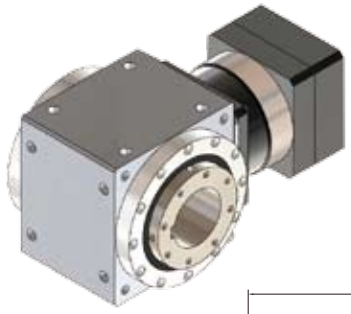

Hollow flange + key type

Dimensions:

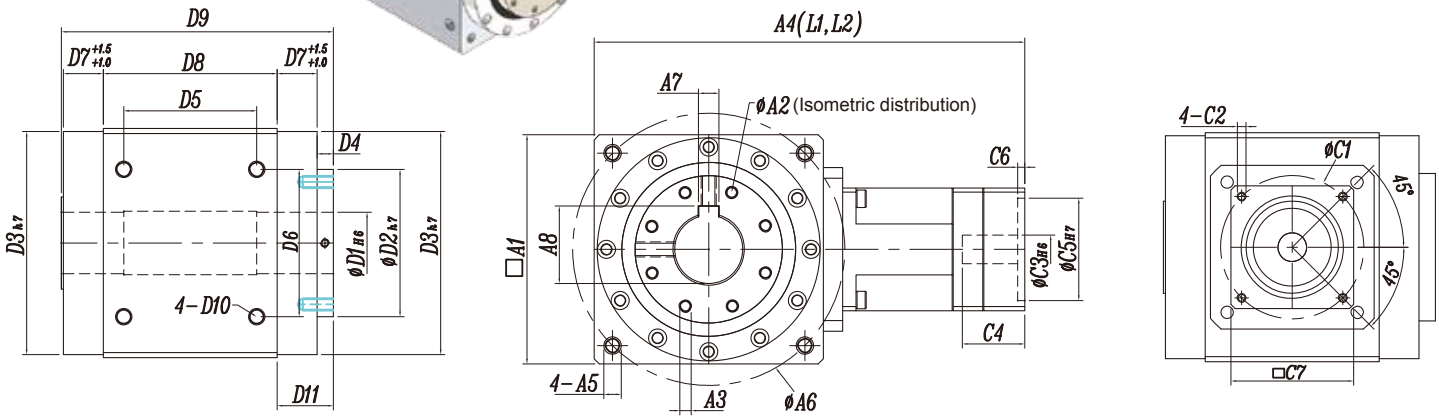

*Customized models: (Variable Range)

1.Hollow Shaft hole path(D1) 2.Keyway(A7) 3.Rotating flange diameter(D2) 4.Rotating flange screws hole(A2) 5.Case Mounting hole or through the holes(4-A5)

2.A5 standard tapped holes, can be set into a through hole

Specification	RXW080AS	RXW110AS	RXW110BS	RXW135AS	RXW135BS	RXW165AS	RXW165BS	RXW200AS	RXW200BS	RXW250BS
A1	80	110	110	138	135	168	165	200	200	250
A2	36	50	50	70	70	95	95	124	124	145
A3	8-M5-10L	8-M6-15L	8-M6-15L	8-M8-15L	8-M8-15L	8-M8-15L	8-M8-15L	12-M8-15L	12-M8-15L	12-M10-18L
A4 (L1 Single-stage)	175/167	226/224	206/198	303/290	252/250	359/343	334/321	397/413	423/407	450/465
A4 (L2 Dual-stage)	206/190	264/250	236/220	362/331	290/277	434/389	393/356	487/464	469/424	540/516
A5	M6	M8	M8	M10	M10	M12	M12	M14	M14	M18
A6	93	130	130	160	160	193	193	240	240	300
A7	6	8	8	10	10	14	14	18	18	20
A8	22.8	33.3	33.3	43.3	43.3	59.1	59.1	84.7	84.7	95.3
D1	20	30	30	40	40	55	55	80	80	90
D2	45	65	65	85	85	110	110	140	140	165
D3	78	106	106	133	133	163	163	195	195	240
D4	7	9.5	9.5	9.5	9.5	17	17	22	22	20
D5	49.5	68	60	86	78	106	100	141	129	132
D6	49.5	65	65	83	83	105	105	130	130	170
D7	13	15	20	10	19	13	19	8.5	22	26
D8	67	90	80	120	102	142	130	182	155	182
D9	102	131.5	131.5	151.5	151.5	187	187	223	223	256
D10	M6-12L	M8-15L	M8-15L	M10-18L	M10-18L	M12-18L	M12-18L	M14-20L	M14-20L	M16-24L
D11	20	24.5	29.5	19.5	28.5	30	36	30.5	44	46
C1	≦90	≦145	≦90	≦200	≦145	≦215	≦200	≦215	≦215	≦265
C2	≦M6	≦M8	≦M6	≦M12	≦M8	≦M12	≦M12	≦M12	≦M12	≦M12
C3	≦19	≦24	≦19	≦35	≦24	≦42	≦35	≦42	≦42	≦55
C4	≦41	≦62	≦41	≦80	≦62	≦116	≦80	≦116	≦116	≦116
C5	≦70	≦110	≦70	≦114.3	≦110	≦180	≦114.3	≦180	≦180	≦230
C6	≦3.5	≦7	≦3.5	≦7	≦7	≦7	≦7	≦7	≦7	≦7
C7	≦80	≦120	≦80	≦180	≦120	≦200	≦180	≦200	≦200	≦250

＊Input shaft and the flange detailed dimensions C1～C7, such as the pages of p19

Large hollow shaft rotary flange Type Dimensions:

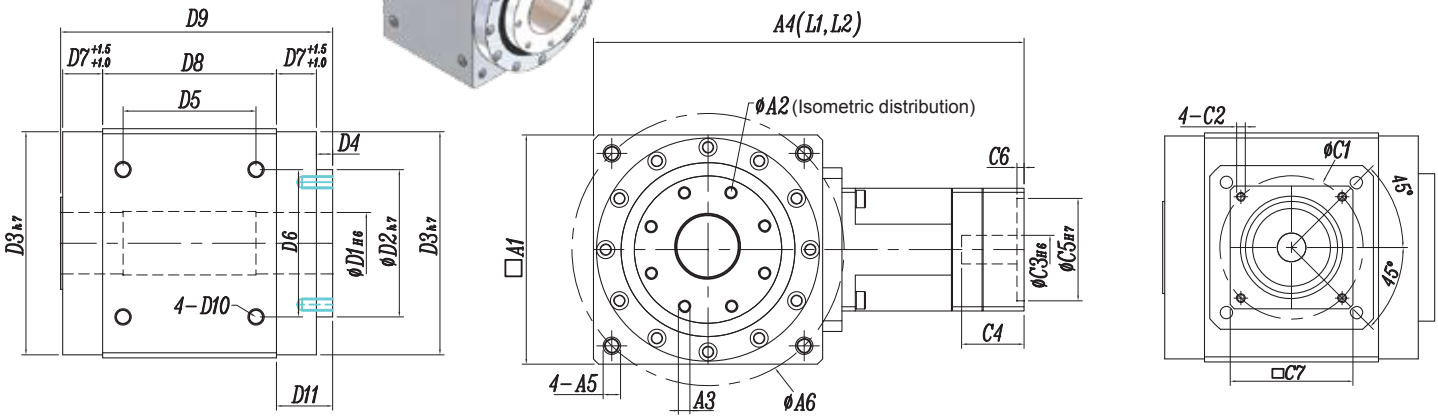

*Customized models: (Variable Range)

1.Hollow Shaft hole path(D1) 2.Keyway(A7) 3.Rotating flange diameter(D2) 4.Rotating flange screws hole(A2) 5.Case Mounting hole or through the holes(4-A5)

2.A5 standard tapped holes, can be set into a through hole

3.Customizable as (ball screw type)

Specification	RXW080AS	RXW110AS	RXW110BS	RXW135AS	RXW135BS	RXW165AS	RXW165BS	RXW200AS	RXW200BS	RXW250BS
A1	80	110	110	138	135	168	165	200	200	250
A2	36	50	50	70	70	95	95	124	124	145
A3	8-M5-10L	8-M6-15L	8-M6-15L	8-M8-15L	8-M8-15L	8-M8-15L	8-M8-15L	12-M8-15L	12-M8-15L	12-M10-18L
A4 (L1 Single-stage)	175/167	226/224	206/198	303/290	252/250	359/343	334/321	397/413	423/407	450/465
A4 (L2 Dual-stage)	206/190	268/255	240/225	362/331	290/277	434/389	393/356	487/464	469/424	540/516
A5	M6	M8	M8	M10	M10	M12	M12	M14	M14	M18
A6	93	130	130	160	160	193	193	240	240	300
D1	20	30	30	40	40	55	55	80	80	90
D2	45	65	65	85	85	110	110	140	140	165
D3	78	106	106	133	133	163	163	195	195	240
D4	7	9.5	9.5	9.5	9.5	17	17	22	22	20
D5	49.5	68	60	86	78	106	100	141	129	132
D6	49.5	65	65	83	83	105	105	130	130	170
D7	13	15	20	10	19	13	19	8.5	22	26
D8	67	90	80	120	102	142	130	182	155	182
D9	102	131.5	131.5	151.5	151.5	187	187	223	223	256
D10	M6-12L	M8-15L	M8-15L	M10-18L	M10-18L	M12-18L	M12-18L	M14-20L	M14-20L	M16-24L
D11	20	24.5	29.5	19.5	28.5	30	36	30.5	44	46
C1	≦90	≦145	≦90	≦200	≦145	≦215	≦200	≦215	≦215	≦265
C2	≦M6	≦M8	≦M6	≦M12	≦M8	≦M12	≦M12	≦M12	≦M12	≦M12
C3	≦19	≦24	≦19	≦35	≦24	≦42	≦35	≦42	≦42	≦55
C4	≦41	≦62	≦41	≦80	≦62	≦116	≦80	≦116	≦116	≦116
C5	≦70	≦110	≦70	≦114.3	≦110	≦180	≦114.3	≦180	≦180	≦230
C6	≦3.5	≦7	≦3.5	≦7	≦7	≦7	≦7	≦7	≦7	≦7
C7	≦80	≦120	≦80	≦180	≦120	≦200	≦180	≦200	≦200	≦250

※Input shaft and the flange detailed dimensions C1～C7, such as the pages of p19

Large hollow shaft packing rings (Keyless bushings) Dimensions:

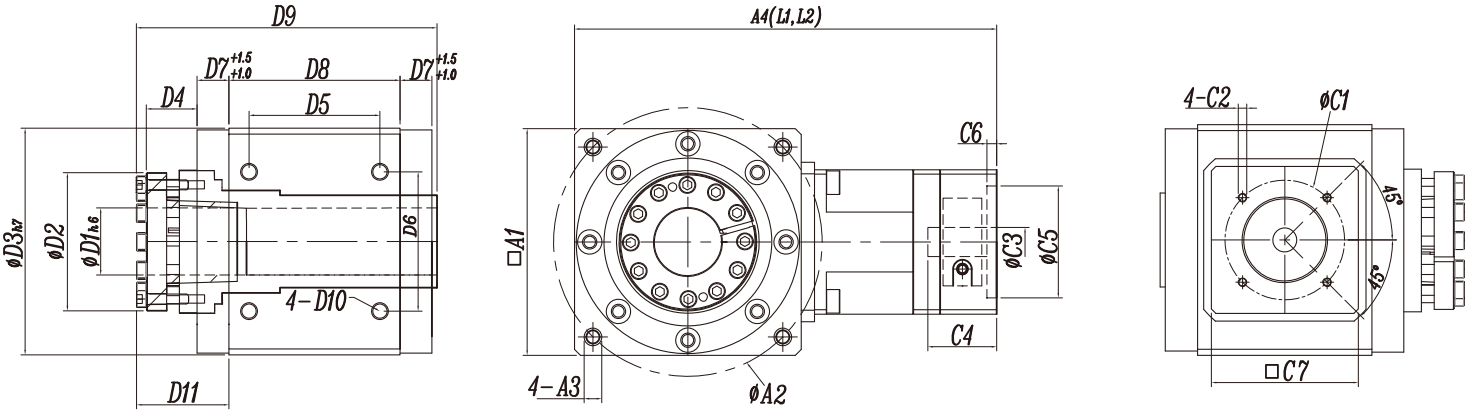

*Customized models: (Variable Range)

1.Hollow Shaft hole path(D1) 2.Keyway(A7) 3.Rotating flange diameter(D2) 4.Rotating flange screws hole(A2) 5.Case Mounting hole or through the holes(4-A5)

2.A5 standard tapped holes, can be set into a through hole

Specification	RXW080AS	RXW110AS	RXW110BS	RXW135AS	RXW135BS	RXW165AS	RXW165BS	RXW200AS	RXW200BS	RXW250BS
A1	80	110	110	138	135	168	165	200	200	250
A2	36	50	50	70	70	95	95	124	124	145
A3	8-M5-10L	8-M6-15L	8-M6-15L	8-M8-15L	8-M8-15L	8-M8-15L	8-M8-15L	12-M8-15L	12-M8-15L	12-M10-18L
A4 (L1 Single-stage)	175/167	226/224	206/198	303/290	252/250	359/3434	334/321	397/413	423/407	450/465
A4 (L2 Dual-stage)	206/190	268/255	240/225	362/331	290/277	434/389	393/356	487/464	469/424	540/516
D1	20	30	30	40	40	55	55	70	70	80
D2	45	65	65	85	85	110	110	140	140	165
D3	78	106	106	133	133	163	163	195	195	240
D4	20	22.5	22.5	24.5	24.5	34	34	42	42	42
D5	49.5	68	60	86	78	106	100	141	129	132
D6	49.5	65	65	83	83	105	105	130	130	170
D7	13	15	20	10	19	13	19	8.5	22	26
D8	67	90	80	120	102	142	130	182	155	182
D9	121	150.5	150.5	173.5	173.5	212	212	243.5	243.5	287
D10	M6-12L	M8-15L	M8-15L	M10-18L	M10-18L	M12-18L	M12-18L	M14-20L	M14-20L	M16-24L
D11	39	43.5	48.5	41.5	50.5	55	61	50.5	64	76
C1	≦90	≦145	≦90	≦200	≦145	≦215	≦200	≦215	≦215	≦265
C2	≦M6	≦M8	≦M6	≦M12	≦M8	≦M12	≦M12	≦M12	≦M12	≦M12
C3	≦19	≦24	≦19	≦35	≦24	≦42	≦35	≦42	≦42	≦55
C4	≦41	≦62	≦41	≦80	≦62	≦116	≦80	≦116	≦116	≦116
C5	≦70	≦110	≦70	≦114.3	≦110	≦180	≦114.3	≦180	≦180	≦230
C6	≦3.5	≦7	≦3.5	≦7	≦7	≦7	≦7	≦7	≦7	≦7
C7	≦80	≦120	≦80	≦180	≦120	≦200	≦180	≦200	≦200	≦250

⁎Input shaft and the flange detailed dimensions C1～C7, such as the pages of p19

RXW/RXW-S Input terminal detailed dimensions:

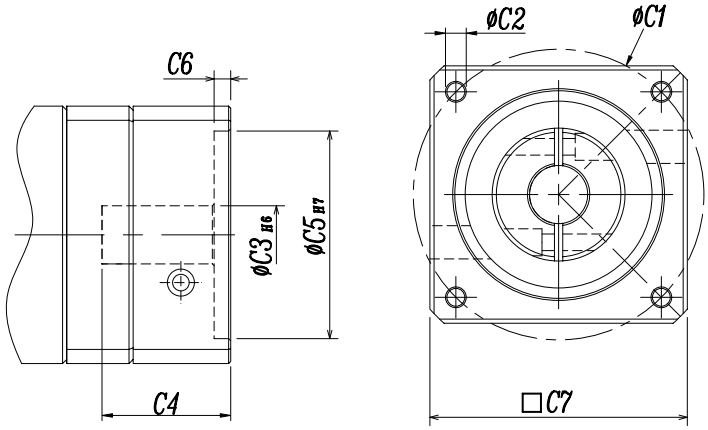

* Input shaft and the flange detailed dimensions C1 ~ C7.

* Motor mark refers to the different brands Input terminal detailed size

*Special products:May depend on the customer to assign to manufacture input the flange size

Model	RXW055A		RXW070A / RXW085A / RXW110BS								RXW105A / RXW110AS / RXW125B / RXW135BS										
Size \ Motor mark	S1	S2	S1	S2	S3	S4	S5	S6	S7	S8	S1	S2	S3	S4	S5	S6	S7	S8	S9	S10	S11
C1	45	46	45	46	70	70	70	90	90	66.7	70	70	70	90	90	90	90	100	145	145	145
C2	M3	M4	M3	M4	M4	M4	M5	M5	M6	M4	M3	M4	M5	M5	M6	M6	M6	M6	M8	M8	M8
C3 H6	8	8	8	8	11	14	14	14	14	6.35	11	14	14	14	14	16	19	16	19	22	24
C4	29	29	31	31	31	31	31	31	31	31	41	41	41	41	41	41	41	41	58	58	58
C5 H7	30	30	30	30	50	50	50	70	70	38.1	50	50	50	70	70	70	70	80	110	110	110
C6	3.5	3.5	3.5	3.5	3.5	3.5	3.5	3.5	3.5	3.5	5	5	5	5	5	5	5	5	5	5	5
C7	42	42	62	62	62	62	62	62	62	62	90	90	90	90	90	90	90	90	130	130	130

Model	RXW125A / RXW135AS / RXW150B / RXW165AS										RXW150A / RXW165AS / RXW180B / RXW200BS							
Size \ Motor mark	S1	S2	S3	S4	S5	S6	S7	S8	S9	S10	S1	S2	S3	S4	S5	S6	S7	S8
C1	90	90	100	115	115	130	145	145	145	145	115	115	145	145	145	145	200	165
C2	M6	M6	M6	M6	M8	M8	M8	M8	M8	M8	M6	M8	M8	M8	M8	M8	M12	M10
C3 H6	16	19	16	24	24	19	19	22	24	28	24	24	19	22	24	28	35	32
C4	54	54	54	54	54	62	62	62	62	63	60	60	65	65	65	65	81	65
C5 H7	70	70	80	95	95	110	110	110	110	110	95	95	110	110	110	110	114.3	130
C6	7	7	7	7	7	7	7	7	7	7	7	7	7	7	7	7	7	7
C7	120	120	120	120	120	120	120	120	120	120	142	142	142	142	142	142	176	142

Model	RXW180A / RXW200AS / RXW220A / RXW250AS										
Size \ Motor mark	S1	S2	S3	S4	S5	S6	S7	S8	S9	S10	S11
C1	145	145	145	115	200	200	165	215	235	235	265
C2	M8	M8	M8	M6	M12	M12	M10	M12	M12	M12	M10
C3 H6	19	22	24	28	35	42	32	38	42	55	55
C4	75	75	75	75	81	81	81	116	116	116	116
C5 H7	110	110	110	110	114.3	114.3	130	180	200	200	230
C6	10	10	10	10	10	10	10	10	10	10	10
C7	180	180	180	180	180	180	180	192	220	220	220

Reducer - backlash measured values

Fixed input shaft, output shaft torque imposed tiny (nominal 5%), measuring stick left and then right measured with θ° (+θ° and -θ°) is the backlash.

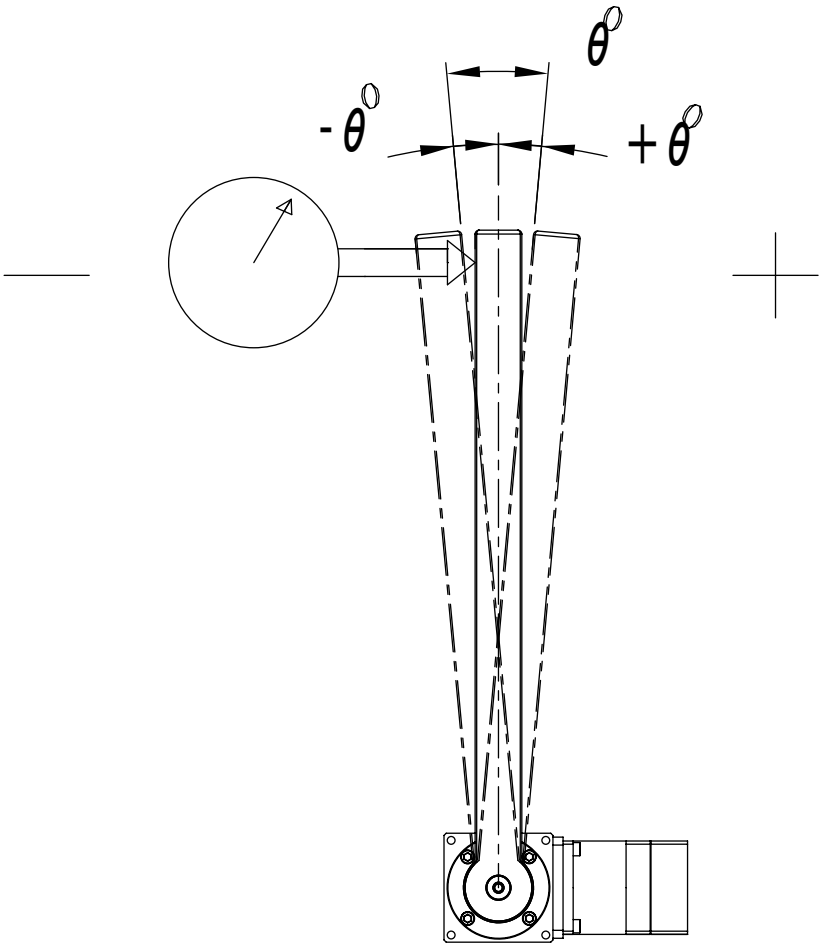

Backlash value is calculated:

EX：When 360 ° the largest □°to 0.05 (3 arc minutes), the radius 500MM, backlash value is equal to

$$(500*2*\pi)\div(360*60)*3=0.436MM$$

θ° to 0.05° (3 arc minutes)=0.436MM(Backlash value or Gear backlash)

Reducer - output shaft runout and concentricity

1.Output shaft runout and concentricity of the level of their life have absolute influence output shaft is easy to produce excessive yaw yaw movement of the gear produces wear life shortened.

2.Use a full range of NSK tapered roller bearings, shaft deflection requirements 0.01MM less (measured torque imposed freeze 5%).

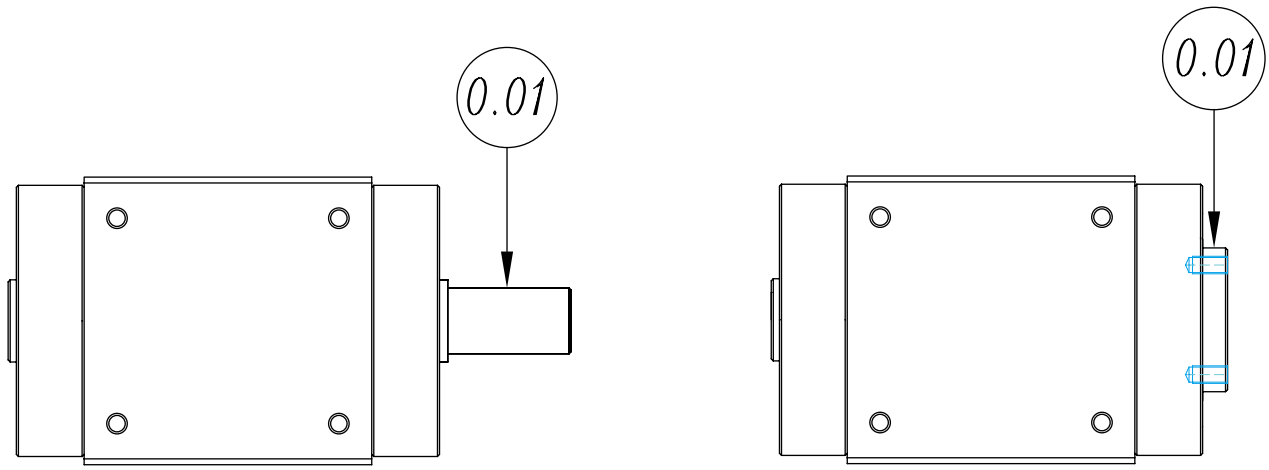

Reducer and motor installation manual

Step 1:
To confirm motor reducer specifications, and motor and reducer mounting surface wipe clean

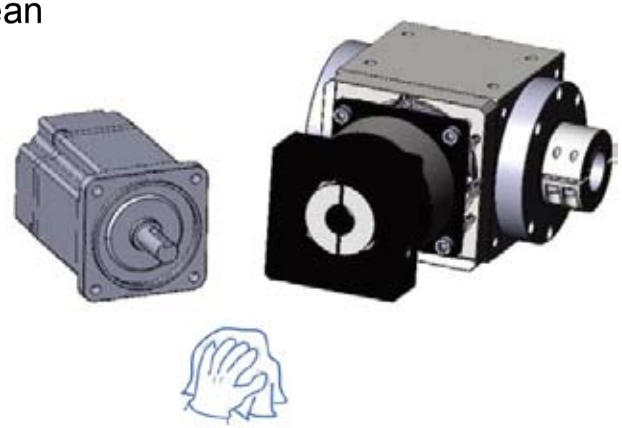

Step 2:
Remove the predecessor key motor

Step 3:
If necessary, please plus shaft bushing

Step 4:
Vertical intake motor, a screw torque values table (Table 1) recommended torque values of 5%, according to the order of 1 to 4, will be attached with a wrench shim the screws gently locked

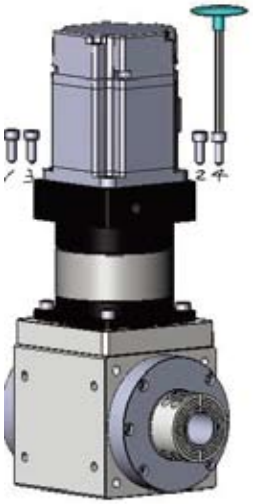

Step 5:
Motor and reducer upright furnishings, with reference to table two proposed torque values, bolt locking torque wrench buried

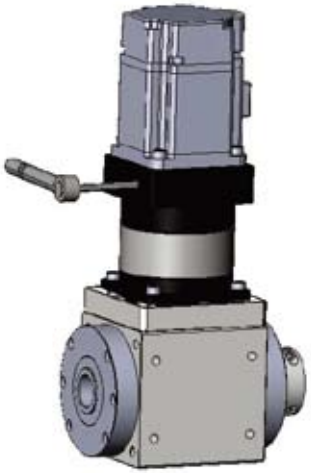

Step 6:
Furnishings, motor and reducer upright recommended torque values screw torque table (Table 1), according to the order of 1 to 4, with a torque wrench to tighten the screws

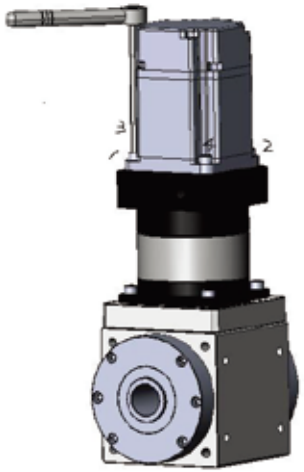

Table —	Tighten the screws torque motor-Recommendations Table						
Screw Size	Hex Size	Screw the locking force strength 8.8		Screw the locking force strength 10.9		Screw the locking force strength 12.9	
	[mm]	[Nm]	[In-lbs]	[Nm]	[In-lbs]	[Nm]	[In-lbs]
M3×0.5 P	2.5	1.3	12	1.8	16	2.1	19
M4×0.7 P	3	3	27	4.1	37	4.9	44
M5× 0.8P	4	6.1	55	8.2	73	9.8	87
M6×1P	5	11	98	14	124	17	151
M8×1.25P	6	25	222	34	302	41	364
M10×1.5P	8	49	434	67	594	80	709
M12×1.75P	10	85	753	116	1028	139	1232
M14× 2P	12	137	1214	186	1648	223	1976
M16× 2P	14	210	1860	286	2534	343	3038

Jia Cheng Precision Co., Ltd.

Address: No. 720, Shuangwen Rd.,Dali
Dist., Taichung City,Taiwan, R.O.C.

TEL:0 4 - 2 4 0 7 - 7 8 6 9

FAX:0 4 - 2 4 0 7 - 7 8 5 9

http: //www.chusheng.com.tw

E-mail: chu.sheng66@msa.hinet.net

2014 03印製